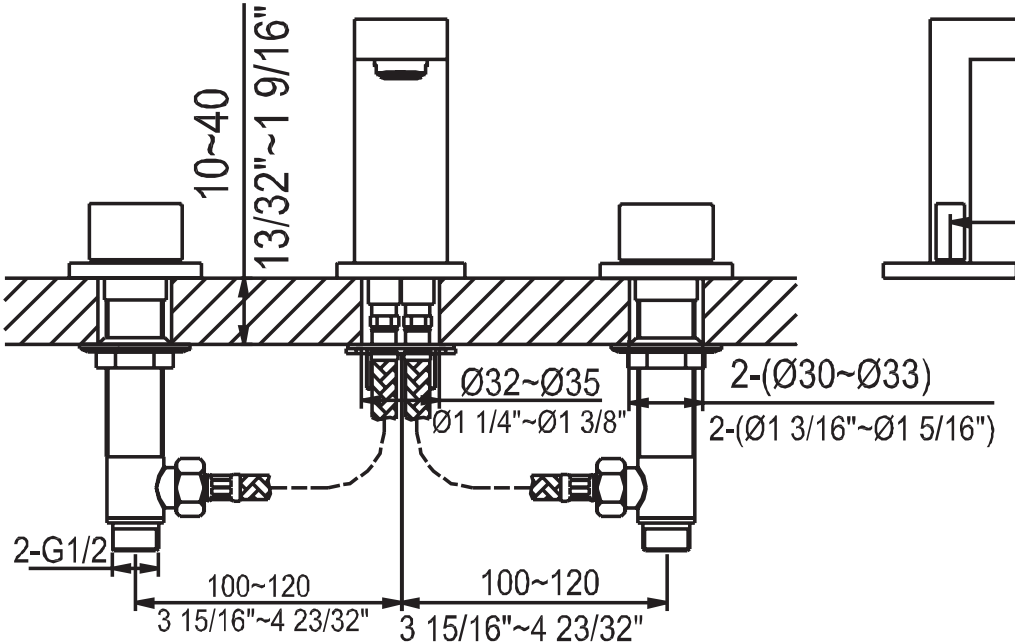
10~40
13/32"~1 9/16"
Ø32~Ø35
Ø1 1/4"~Ø1 3/8"
2-(Ø30~Ø33)
2-(Ø1 3/16"~Ø1 5/16")
2-G1/2
100~120
3 15/16"~4 23/32"
100~120
3 15/16"~4 23/32"

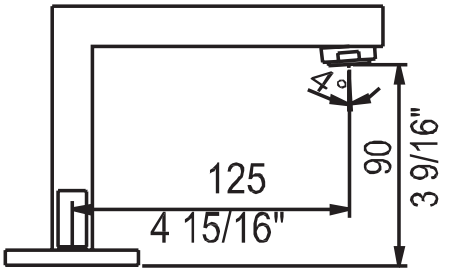
4°
125
4 15/16"
90
3 9/16"