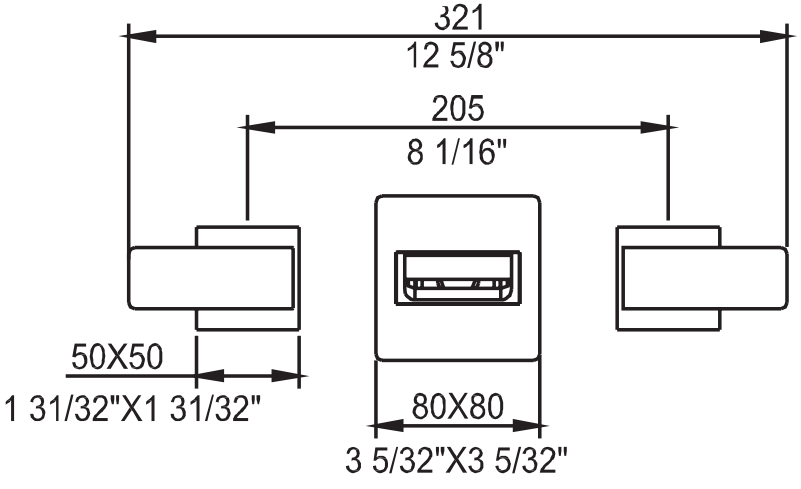
321
12 5/8"
205
8 1/16"
50X50
1 31/32"X1 31/32"
80X80
3 5/32"X3 5/32"

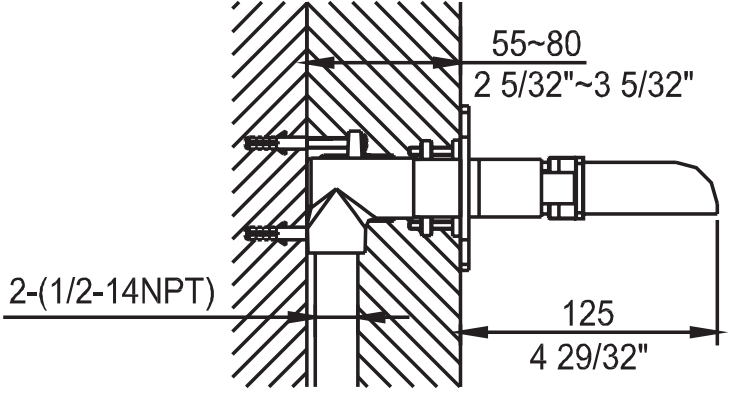
55~80
2 5/32"~3 5/32"
2-(1/2-14NPT)
125
4 29/32"