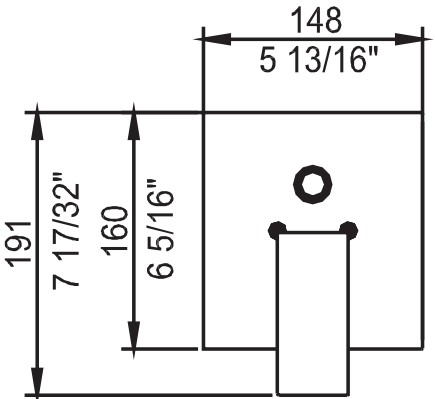
148
5 13/16"
191
7 17/32"
160
6 5/16"

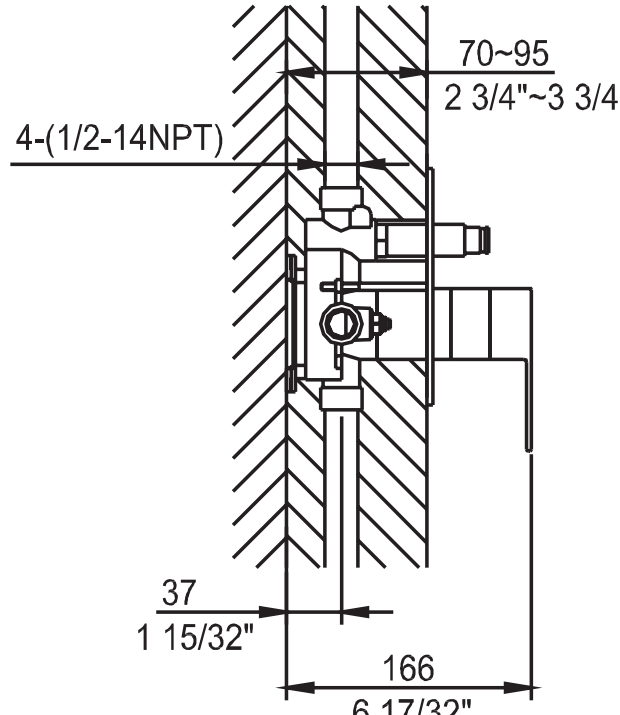
70~95
2 3/4"~3 3/4'
4-(1/2-14NPT)
37
1 15/32"
166
6 17/32"