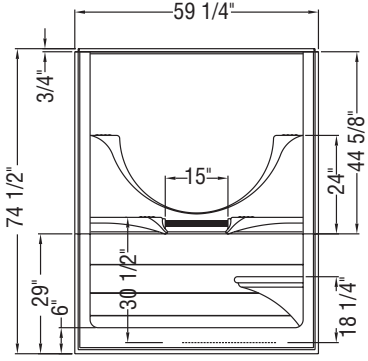
59 1/4"
3/4"
74 1/2"
15"
24"
44 5/8"
29"
6"
30 1/2"
18 1/4"

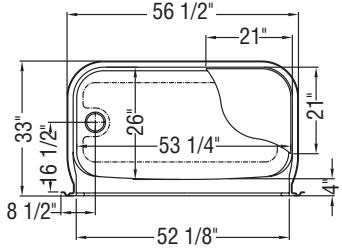
56 1/2"
21"
33"
26"
21"
16 1/2"
53 1/4"
4"
8 1/2"
52 1/8"