American Imaginations

Product ID 19500

	QTY	Product ID	Series	Product Type	Description	Color	Stock*	Expected Stock*	Expected Stock ETA*
	1	604	Xena	Ceramic Top	48-in. W 18.25-in. D Ceramic Top In White Color For 3H8-in. Faucet	White	36	0	
	2	17478	Shaker	Vanity Base	22.75-in. W 18-in. D Modern Plywood-Veneer Vanity Base Only In White	White	16	0	

**Estimated as of 16 Dec 2021 3:01 PM.*

Quality control approved in Canada. Each box on your order is physically opened-up and inspected to make sure only the highest quality product is shipped. We take and store photos of every single quality audit of every single order we ship. You can see them when you track your order on our website. This product is a group of multiple products. This modern vanity set belongs to the exquisite Shaker design series. It features a rectangle shape. This vanity set is designed to be installed as a floor mount vanity set. It is constructed with plywood-veneer. This vanity set comes with a lacquer-paint finish in White color. It is designed for a 3h8-in. faucet.

Feature(s):

- This product is a bundle (set of multiple products).
- This vanity set belongs to the shaker series.
- This vanity set features a rectangle shape with a modern style.
- This product is made for floor mount installation.
- DIY installation instructions are included in the box.
- This vanity set is designed for a 3h8-in. faucet and the faucet drilling location is on the left-right.
- Comes with an overflow for safety.
- This vanity set features 2 sinks.
- This vanity set features 4 doors.
- This vanity set features 2 drawers.
- This vanity set is made with plywood-veneer.
- The primary color of this product is white and it comes with chrome hardware.
- Smooth non-porous surface; prevents from discoloration and fading.
- Double fired and glazed for durability and stain resistance.
- 1.75-in. standard USA-Canada drain opening.
- No MDF or chipboard used.
- Cabinet hardware included.
- Completely finished from all sides including back and inside.
- 48-in. Width (left to right).
- 18.25-in. Depth (back to front).
- 33.5-in. Height (top to bottom).
- All dimensions are nominal.
- This product can usually be shipped out in 1-5 day.
- Quality control approved in Canada.
- Each box on your order is physically opened-up and inspected to make sure only the highest quality product is shipped.
- We take and store photos of every single quality audit of every single order we ship.
- You can see them when you track your order on our website.
- THIS PRODUCT INCLUDE(S): 1x ceramic top in white color (604), 2x units of vanity base in white color (17478).

Product ID:	17478
Product Type:	Vanity Set
Series:	Shaker
Shape:	Rectangle
Install Type:	Floor Mount
Faucet Drilling:	3H8-in.
Faucet Drilling Location:	Left-Right
Overflow:	Yes
Num Of Sinks:	2
Num Of Doors:	4
Num Of Drawers:	2
Includes Faucets:	No
Includes Drains:	No
Width Group:	40-in. - 49-in.
Top Thickness:	0.75
Top Color:	White
Material:	Plywood-Veneer
Style:	Modern
Finish:	Lacquer-Paint
Hardware Color:	Chrome
Color:	White
Recommended Ship Method:	LTL

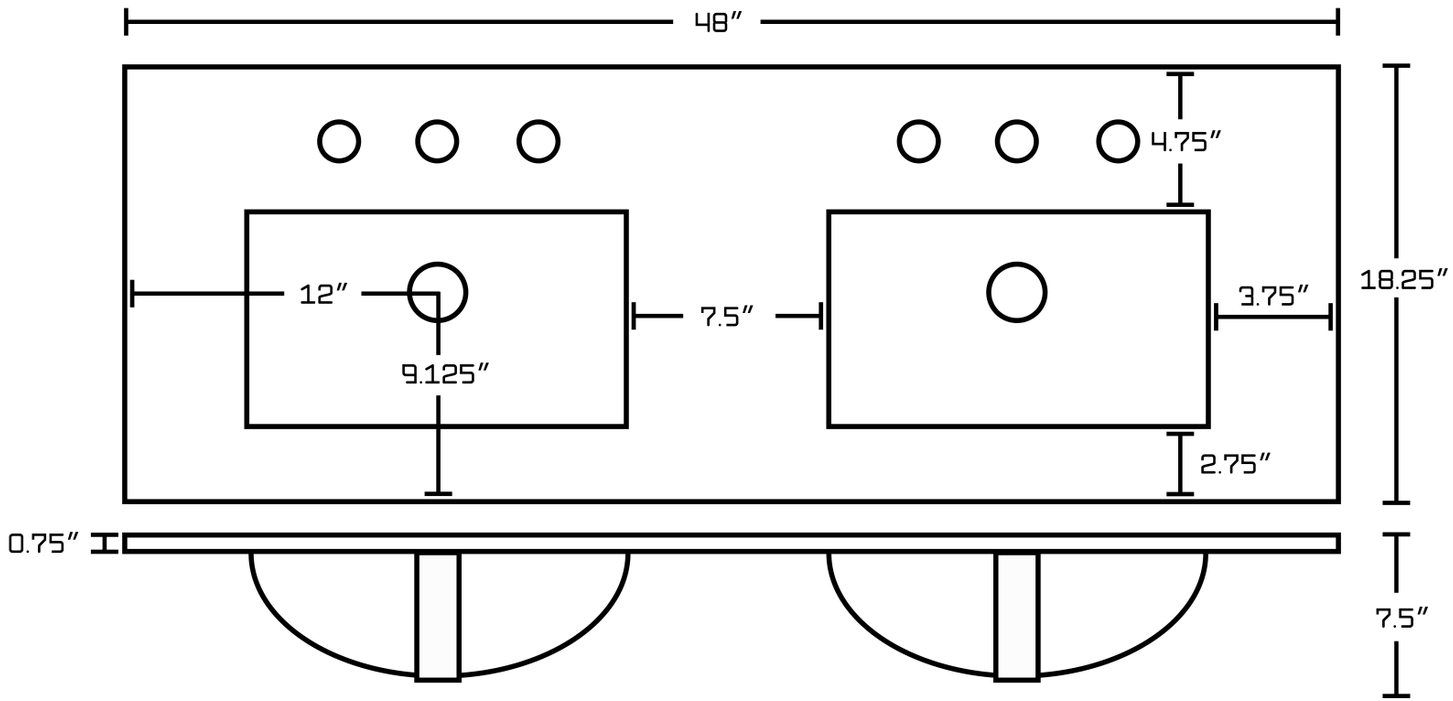
48″
4.75″
12″
7.5″
3.75″
18.25″
9.125″
2.75″
0.75″
7.5″

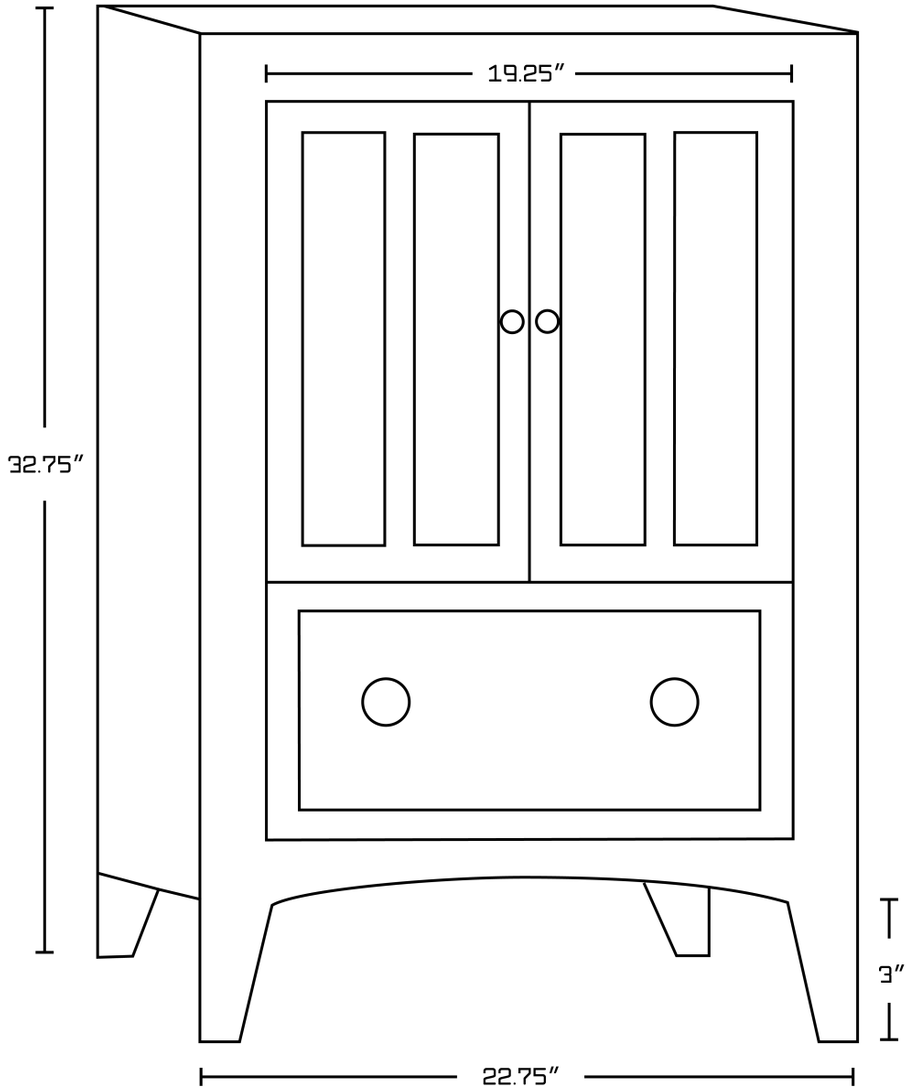
19.25″
32.75″
3″
22.75″

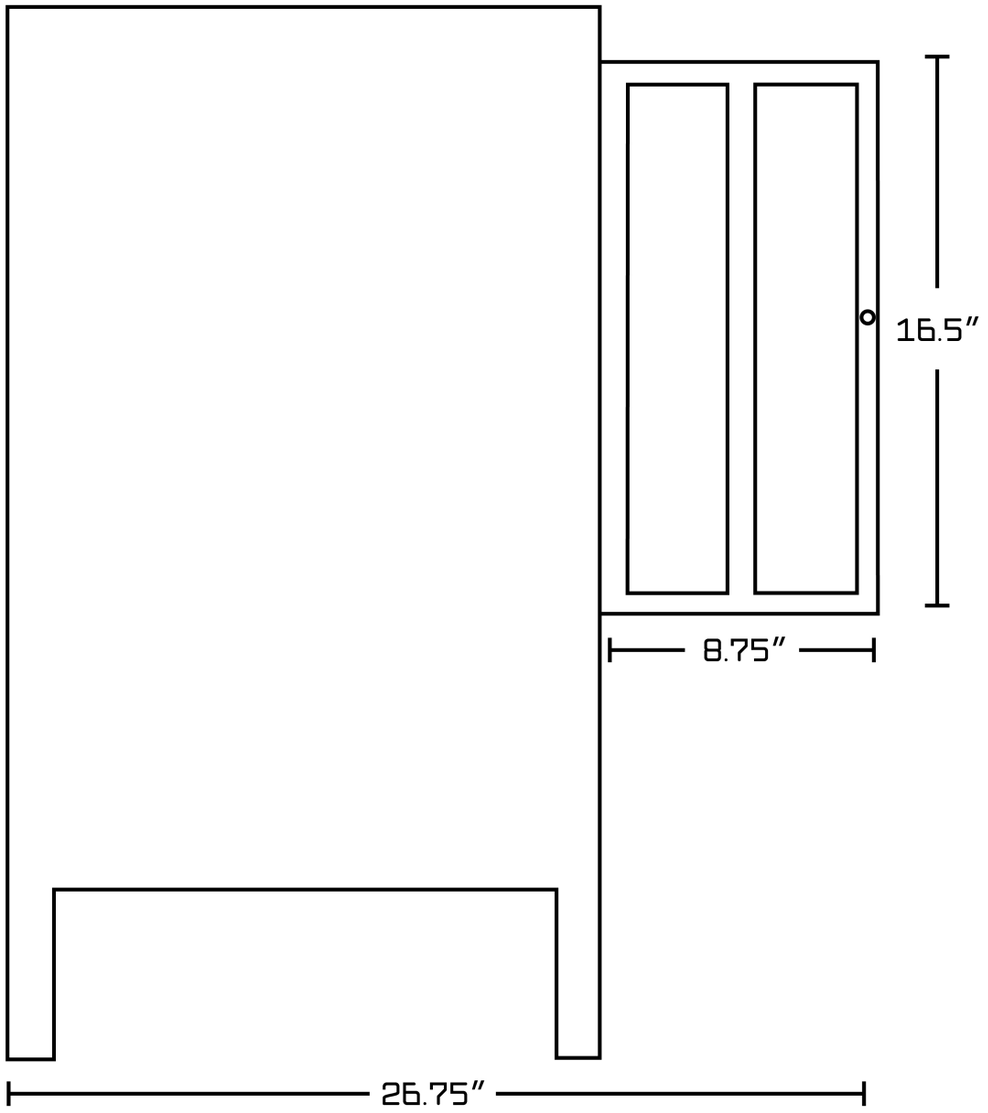
16.5″
8.75″
26.75″

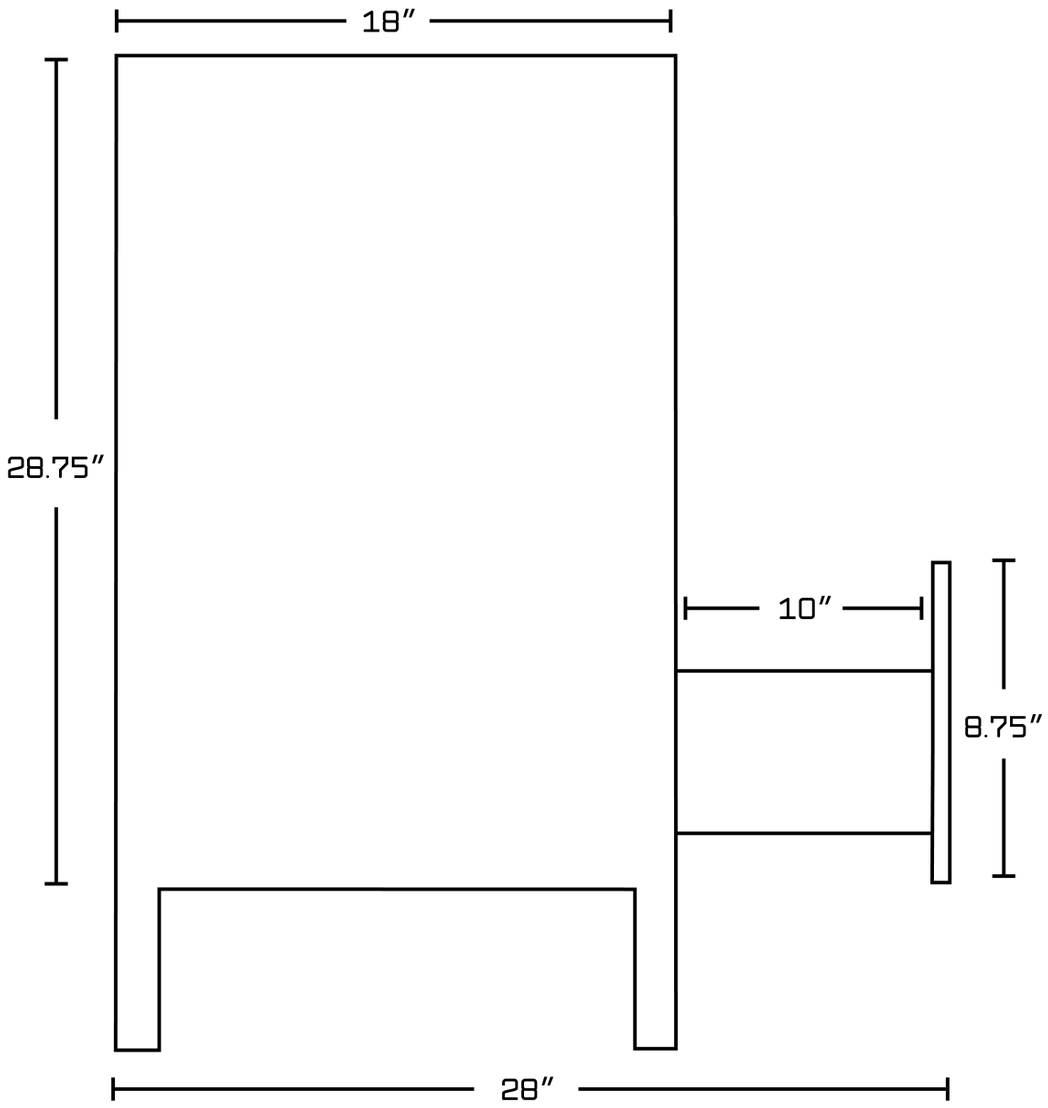
18″
28.75″
10″
8.75″
28″

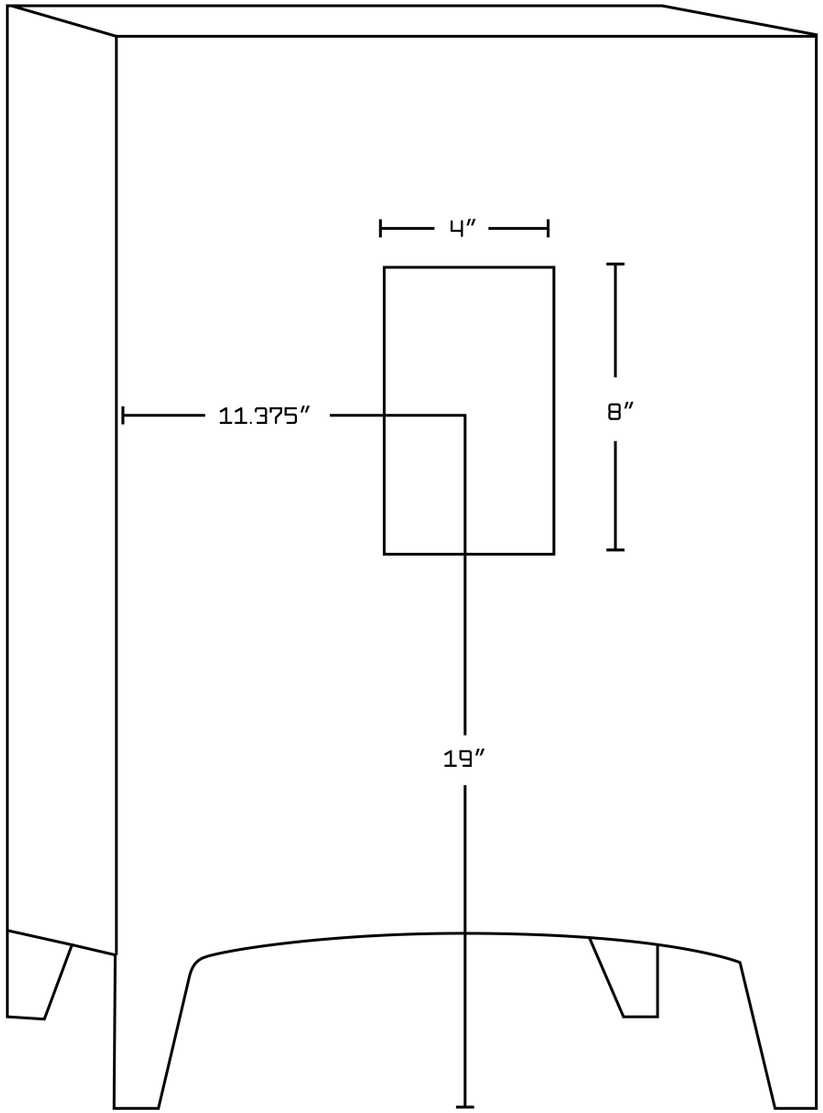
4″
11.375″
8″
19″

Notes