American Imaginations

Product ID 18840

	QTY	Product ID	Series	Product Type	Description	Color	Stock*	Expected Stock*	Expected Stock ETA*
	1	324	N/A	Bathroom Undermount Sink	18.25-in. W 13.5-in. D Rectangle Bathroom Undermount Sink In White Color	White	403	0	
	1	551	Xena	Glass Top	14-in. W X 18-in. D Glass Top In Black Color	Black	71	0	
	1	672	Elite	Stone Top	23.75-in. W 18.25-in. D Stone Top In Bianca Carara Color For 3H4-in. Faucet	Bianca Carara	999	0	
	1	541	Xena	Vanity Base	23.25-in. W 17.25-in. D Modern Wall Mount Plywood-Veneer Vanity Base Only In White	White	46	0	

	1	549	Xena	Modular Drawer	14-in. W 17.8-in. H Modern Plywood-Veneer Modular Drawer In White	White	38	0	

**Estimated as of 16 Dec 2021 2:41 PM.*

Quality control approved in Canada. Each box on your order is physically opened-up and inspected to make sure only the highest quality product is shipped. We take and store photos of every single quality audit of every single order we ship. You can see them when you track your order on our website. This product is a group of multiple products. This modern vanity set belongs to the exquisite Xena design series. It features a rectangle shape. This vanity set is designed to be installed as a wall mount vanity set. It is constructed with plywood-melamine. This vanity set comes with a melamine finish in White color. It is designed for a 3h4-in. faucet.

Product ID:	549
Product Type:	Vanity Set
Series:	Xena
Shape:	Rectangle
Install Type:	Wall Mount
Faucet Drilling:	3H4-in.
Faucet Drilling Location:	Center
Overflow:	Yes
Num Of Sinks:	1
Num Of Drawers:	3
Includes Faucets:	No
Includes Drains:	No
Undermount Sinks Color:	White
Width Group:	30-in. - 39-in.
Top Thickness:	1.5
Top Color:	Bianca Carara
Material:	Plywood-Melamine
Style:	Modern
Finish:	Melamine
Hardware Color:	Chrome
Color:	White
Recommended Ship Method:	SP

Feature(s):

- This product is a bundle (set of multiple products).
- This vanity set belongs to the xena series.
- This vanity set features a rectangle shape with a modern style.
- This product is made for wall mount installation.
- DIY installation instructions are included in the box.
- This vanity set is designed for a 3h4-in. faucet and the faucet drilling location is on the center.
- Comes with an overflow for safety.
- This vanity set features 1 sink.
- This vanity set features 3 drawers.
- The color of the undermount sink is white.
- This vanity set is made with plywood-melamine.
- The primary color of this product is white and it comes with chrome hardware.
- Smooth non-porous surface; prevents from discoloration and fading.
- Double fired and glazed for durability and stain resistance.
- 1.75-in. standard USA-Canada drain opening.
- Sink cut-out included in the box.
- It is highly recommended that you wait for the sink to physically arrive before proceeding with any cut-outs.
- Smooth non-porous surface; prevents from discoloration and fading.
- Quartz is an extremely hard material that is tougher and stronger than granite and marble.
- No MDF or chipboard used.
- Cabinet hardware included.
- Completely finished from all sides including back and inside.
- 37.75-in. Width (left to right).
- 18.25-in. Depth (back to front).
- 22.75-in. Height (top to bottom).
- All dimensions are nominal.
- This product can usually be shipped out in 1-5 day.
- Quality control approved in Canada.
- Each box on your order is physically opened-up and inspected to make sure only the highest quality product is shipped.
- We take and store photos of every single quality audit of every single order we ship.
- You can see them when you track your order on our website.
- THIS PRODUCT INCLUDE(S): 1x bathroom undermount sink in white color (324), 1x glass top in black color (551), 1x stone top in bianca carara color (672), 1x vanity base in white color (541), 1x modular drawer in white color (549).

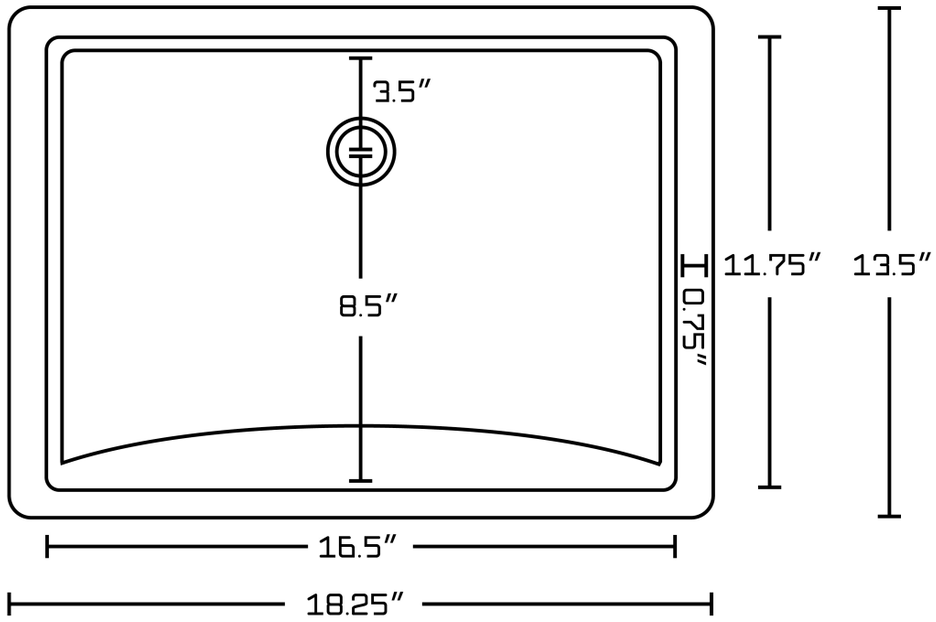
3.5″
8.5″
0.75″
11.75″
13.5″
16.5″
18.25″

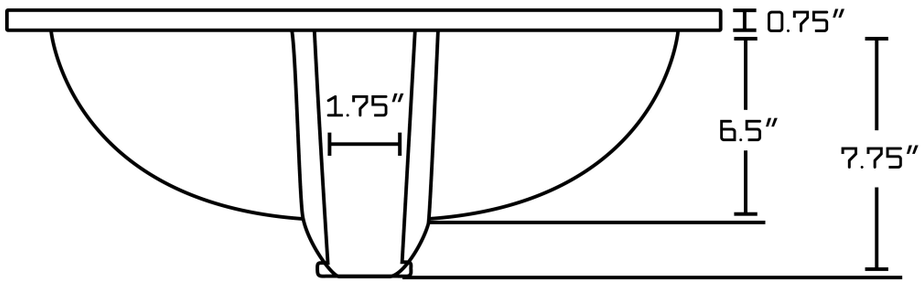
0.75″
1.75″
6.5″
7.75″

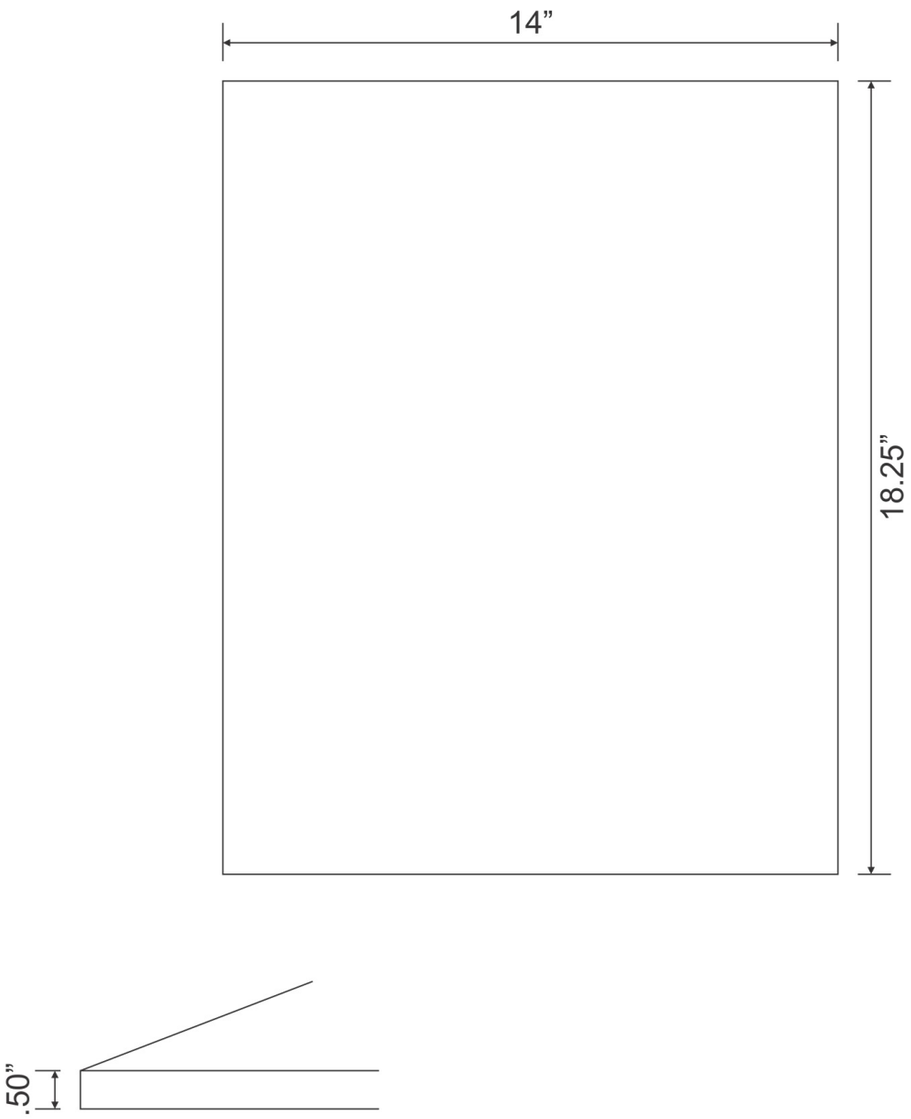
14”
18.25”
.50”

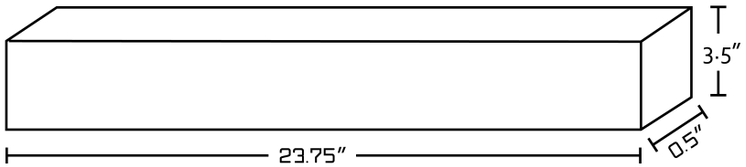

BACK SPLASH

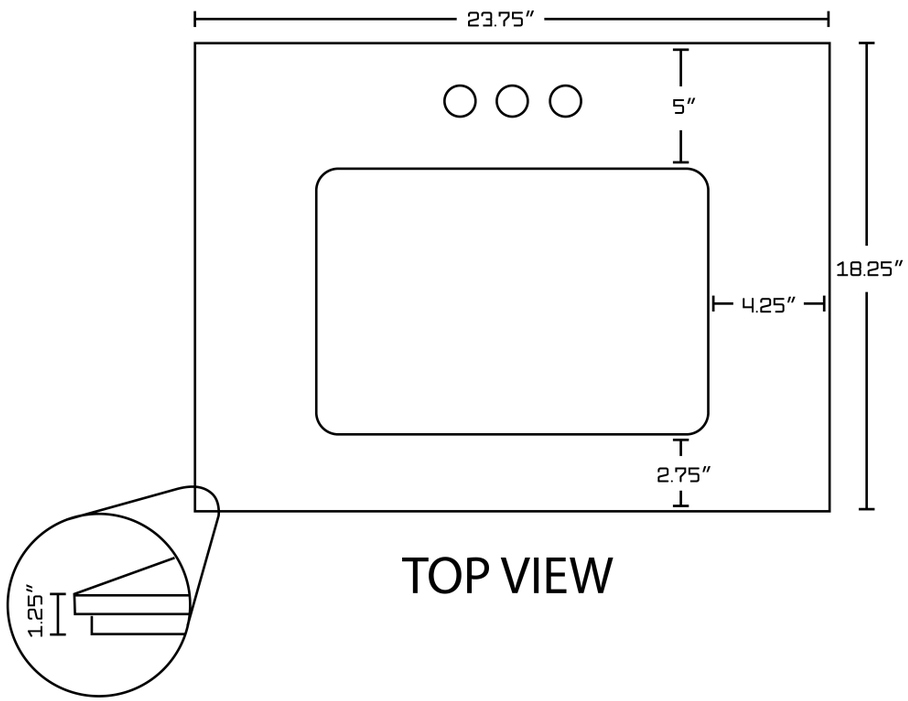

TOP VIEW

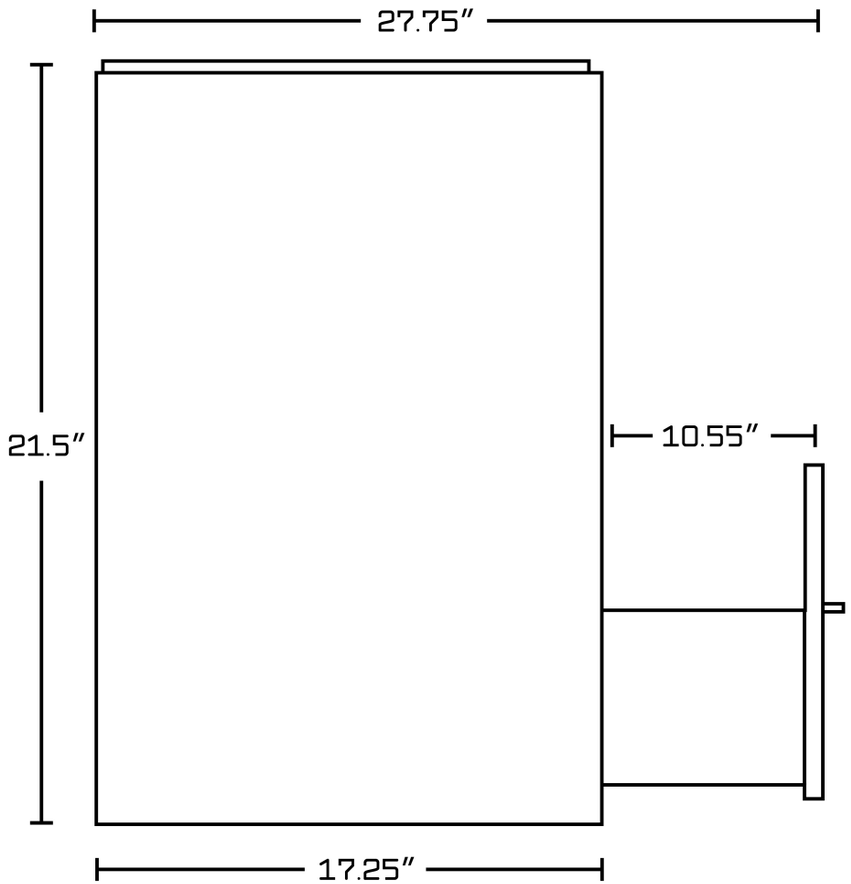
27.75″
21.5″
10.55″
17.25″

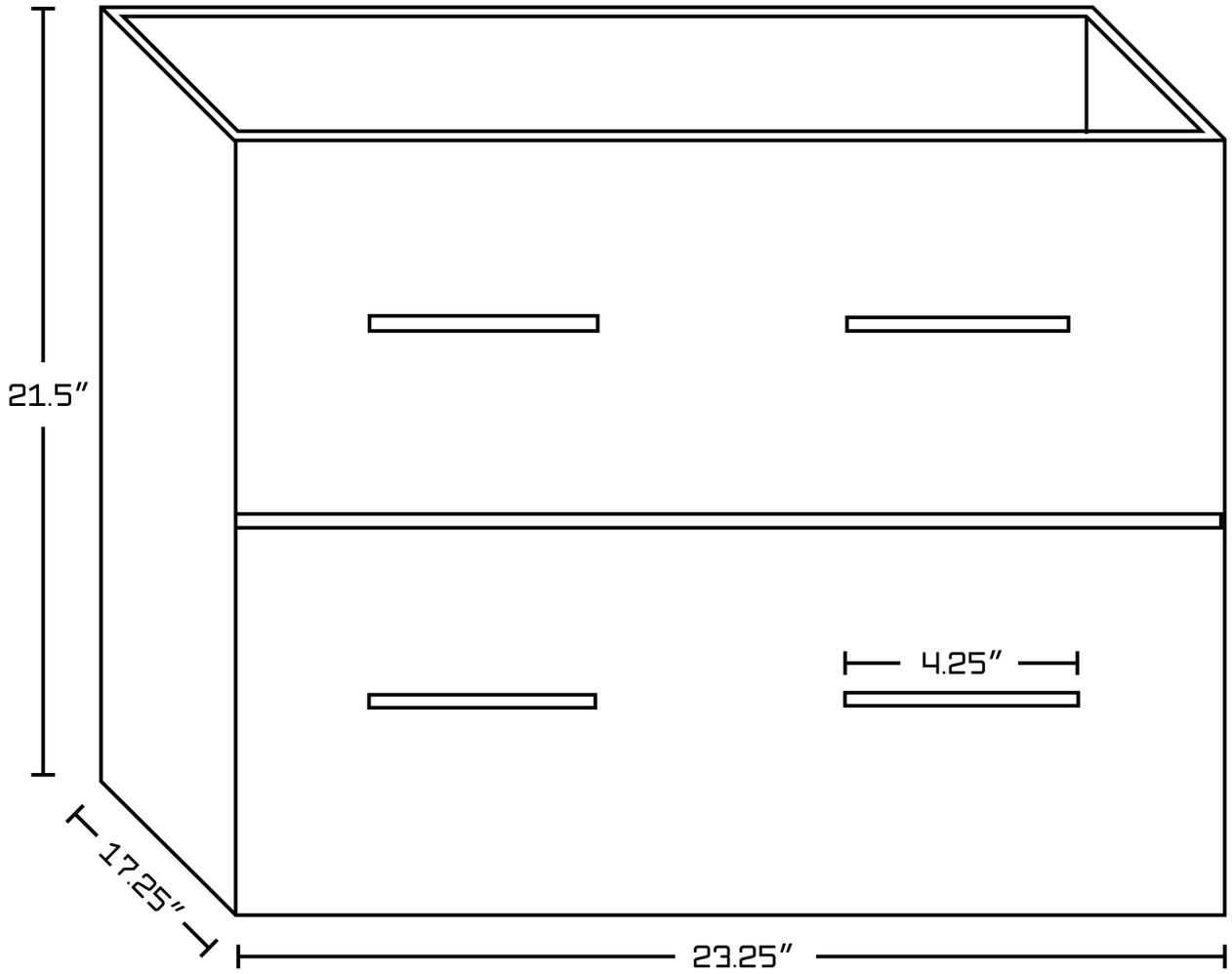
21.5”
17.25”
23.25”
4.25”

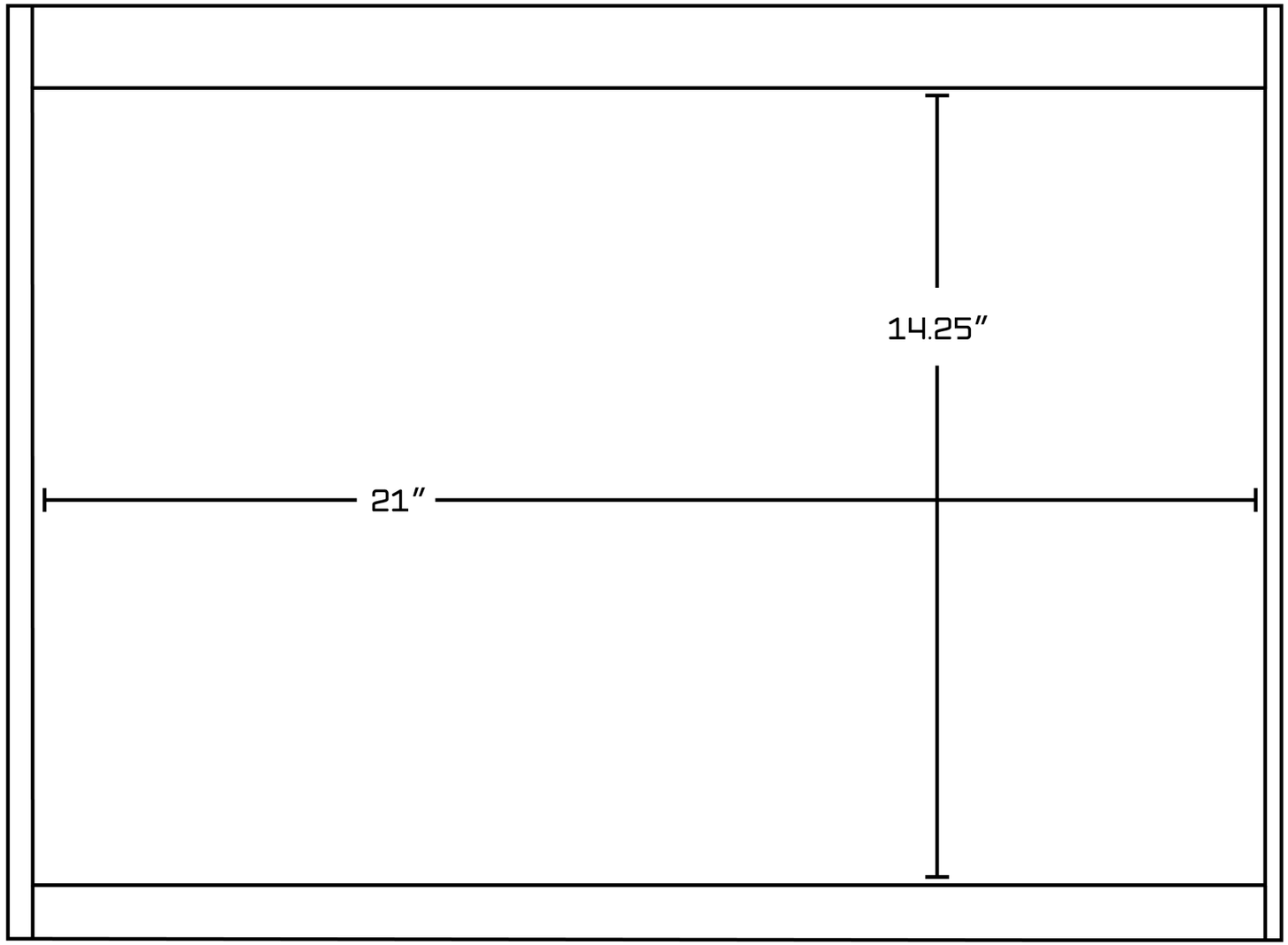
14.25”
21”

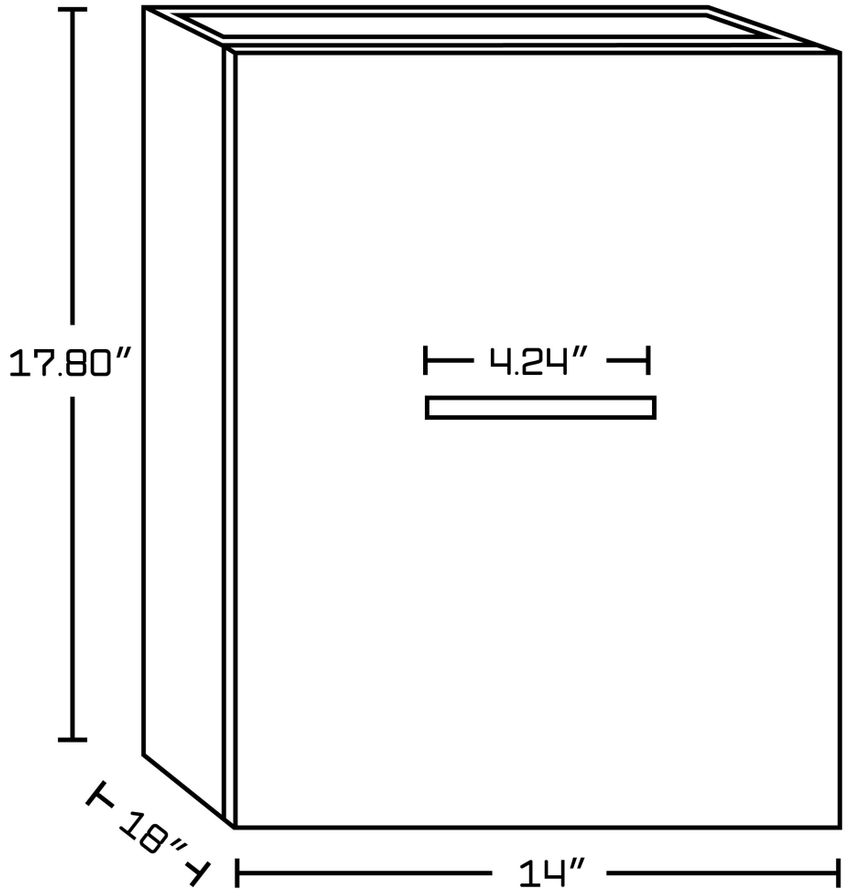
17.80″
4.24″
18″
14″

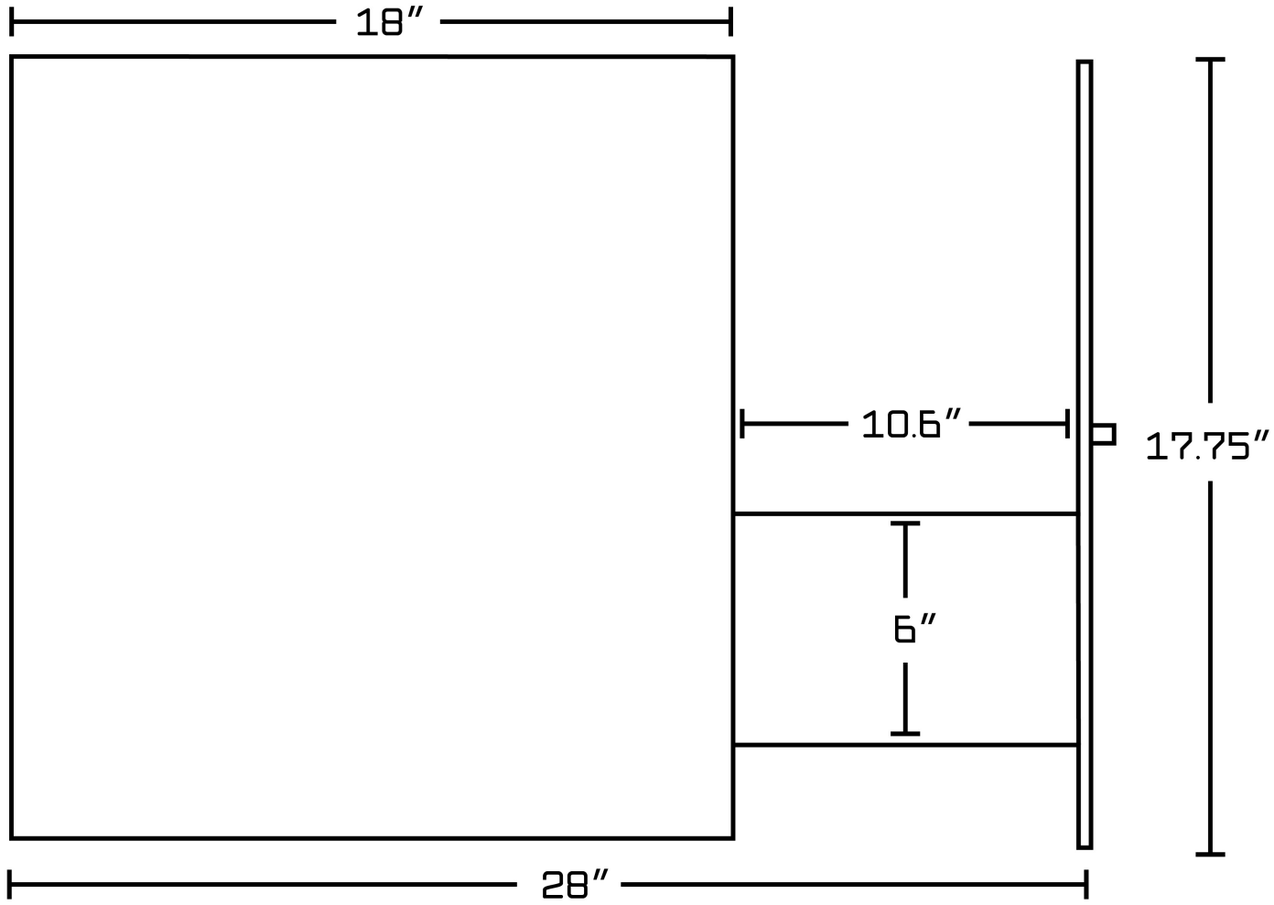
18″
10.6″
17.75″
6″
28″

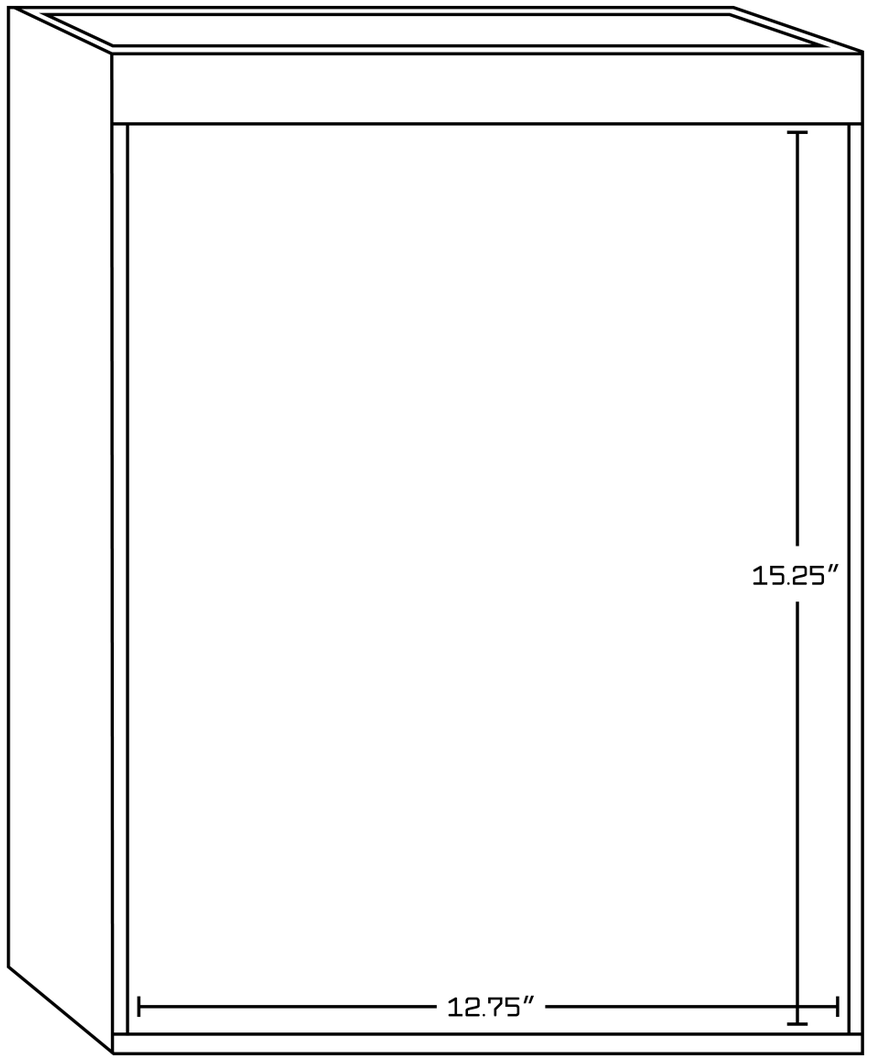
15.25″
12.75″

Notes