CK318300TX
Travel Trunk
Console Table
ASSEMBLY INSTRUCTION

Southern ENTERPRISES

For assistance with assembly contact:
Southern Enterprises Inc.
Customer Service 1-800-633-5096
service@seidal.com
www.seidal.com

PO# 12874

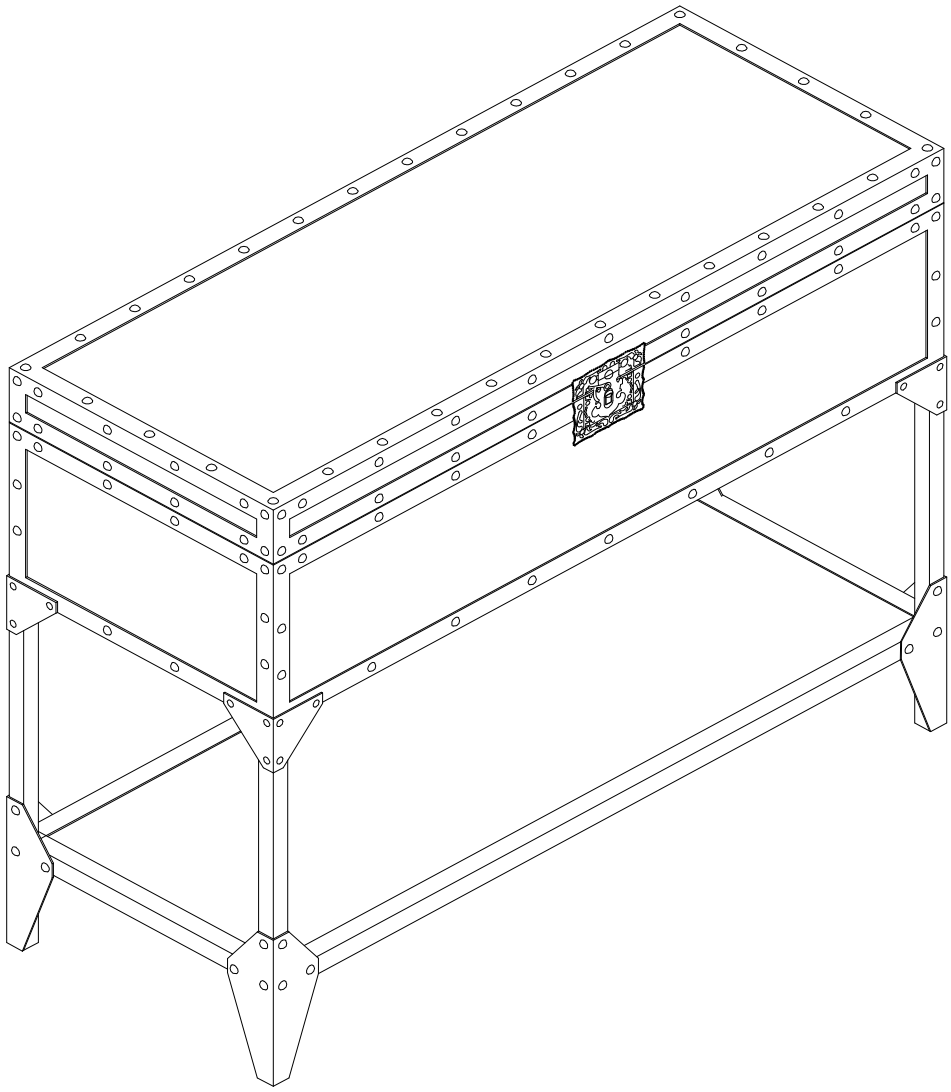

Travel Trunk Console
Parts List

Please check packaging for all parts and hardware before discarding. Unpack and lay parts on clean, padded surface like carpet or blanket. Check that you have all parts indicated. Call customer service if hardware is missing. Before beginning assembly, carefully study the diagrams below and sort your hardware according to the pictures. Using the incorrect hardware will cause damage.

A Quantity of 1

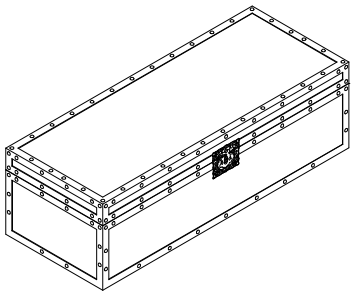

top frame

B1/B2/B3/B4 Quantity of 4

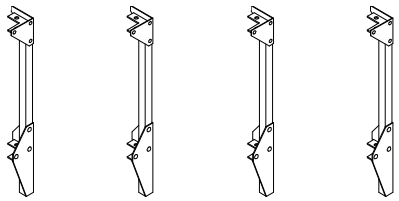

leg B1 B2 B3 B4

C Quantity of 1

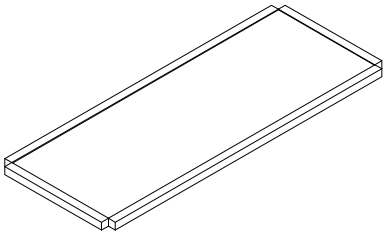

shelf panel

D Quantity of 1

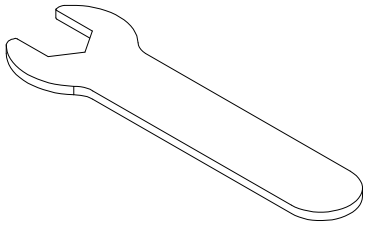

wrench

E Quantity of 16

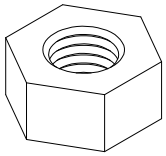

nut

F Quantity of 16

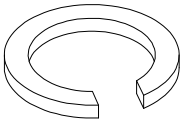

spring washer

G Quantity of 16

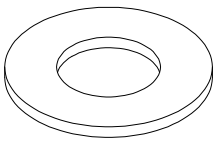

flat washer

Care and Cleaning Instructions:
Before using, wipe with a clean, dry cloth. Periodically apply furniture wax to renew the finish. Avoid rubbing or scratching the surface with rough or abrasive objects.

For replacement parts or questions, please call customer service at 1-800-633-5096.

Travel Trunk Console

Assembly Instructions

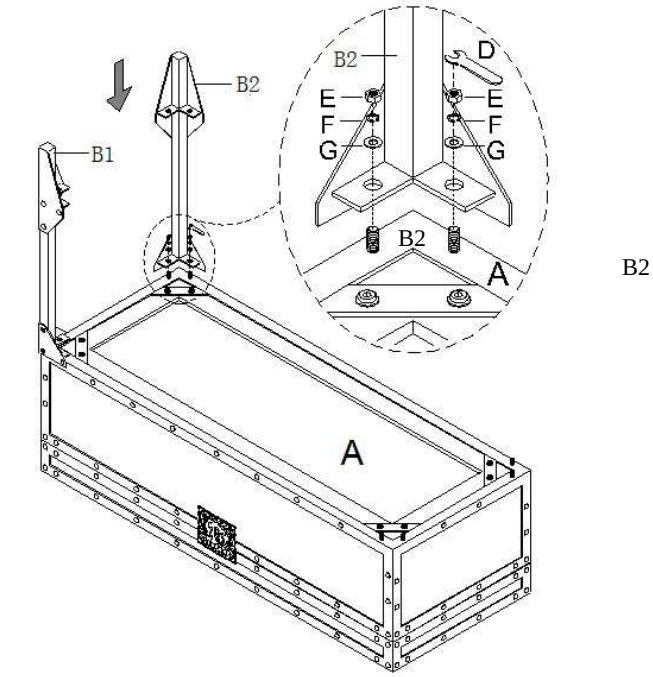

B2

Figure 1

Attach two legs (B1, B2) to the table top frame (A) onto the pre-installed bolts. Use flat washers (G), spring washers (F), nuts (E), and wrench (D).

Do not tighten nuts completely at this time.

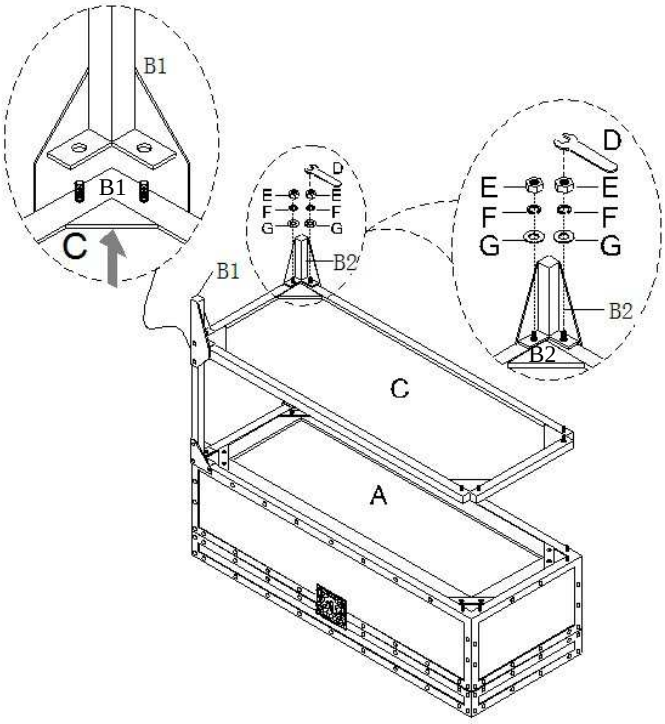

Figure 2

Attach the shelf panel (C) to assembled unit with flat washers (G), spring washers (F), nuts (E), and wrench (D).

Do not tighten nuts completely at this time.

Travel Trunk Console

Assembly Instructions

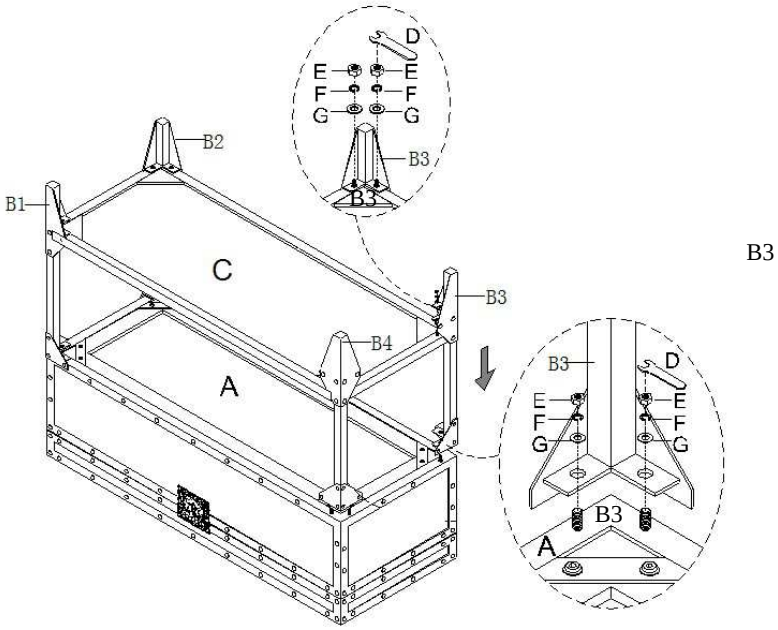

Figure 3

Attach the other two legs (B3, B4) to assembled unit with flat washers (G), spring washers (F), nut (E), and wrench (D).

Tighten all nuts completely using wrench (D)

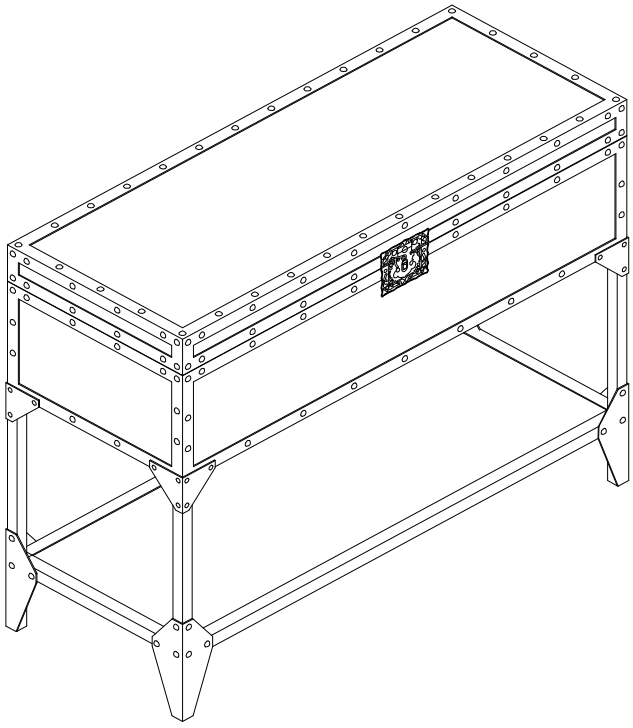

Figure 4

Now your new Travel trunk console is ready to use.

Top panel supports up to 40 lbs.

Interior supports up to 30 lbs.

Bottom shelf supports up to 20 lbs.

Parts Replacement Form

Customer Information

Name _____

Address _____

City/State/Zip Code _____

Phone Number _____

Please indicate where you purchased this item: Store/Website/Catalog

_____

Please indicate color/size/style number:

_____

Style No	Parts Letter	Parts Description	Quantity Needed

Please immediately examine this product carefully. Any request for missing parts or damage replacement must be received within 90 days of your receipt of the product. Replacement, if available, will be honored within this time frame. Parts will not be available for items arriving fully assembled. We do not recommend modifying product(s) and we are not responsible for any damages due to product modification(s). If damages or missing parts are not reported within 90 days of your receipt, we are under no obligation to provide parts or replacement merchandise. Please contact Southern Enterprises at 800-633-5096 or in Dallas 972-869-0111/ 9am – 4pm Mon-Fri Central time if you have product issues or email us at service@seidal.com. Please ask for customer service representative for issues involving damages or replacement parts. Please ask for technical assistance representative for any issues with product and assembly/construction.

Please contact the retailer that you purchased from for returns.

Southern ENTERPRISES

Customer Service 1-800-633-5096
service@seidal.com
Southern Enterprises, Inc.
600 Freeport Parkway, Suite 200
Coppell, Texas 75019