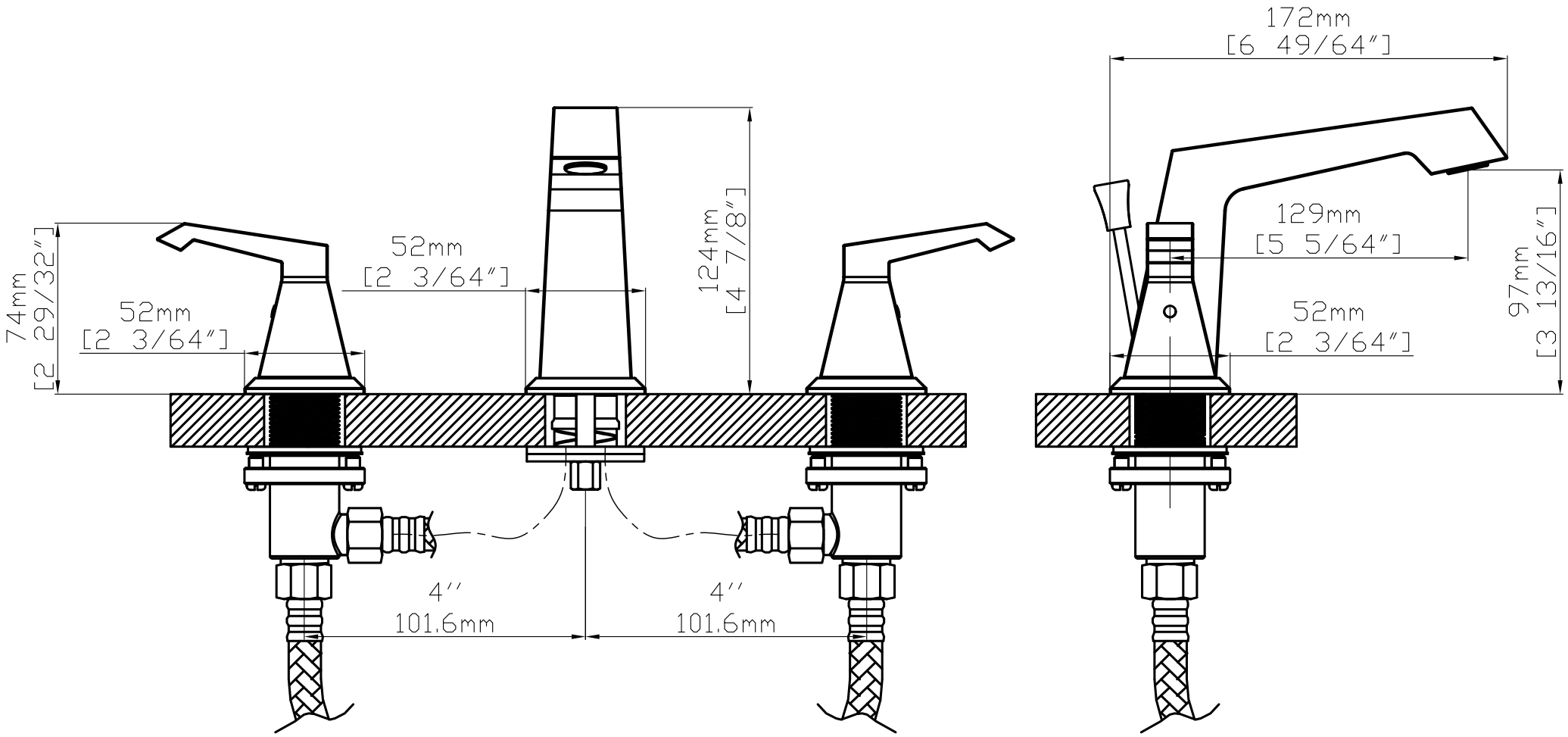
172mm
[6 49/64″]
124mm
[4 7/8″]
74mm
[2 29/32″]
52mm
[2 3/64″]
52mm
[2 3/64″]
129mm
[5 5/64″]
52mm
[2 3/64″]
97mm
[3 13/16″]
4′′
101.6mm
4′′
101.6mm