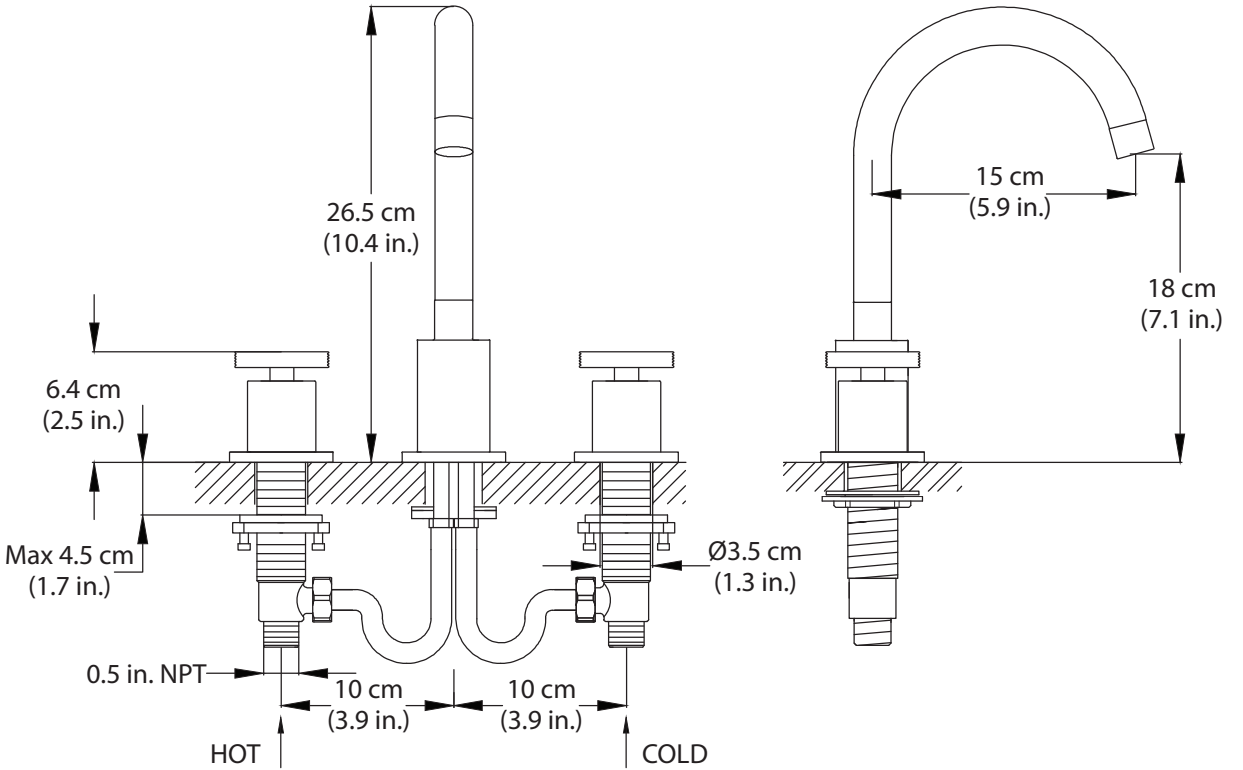
26.5 cm
(10.4 in.)
6.4 cm
(2.5 in.)
Max 4.5 cm
(1.7 in.)
Ø3.5 cm
(1.3 in.)
0.5 in. NPT
10 cm
(3.9 in.)
10 cm
(3.9 in.)
HOT
COLD
15 cm
(5.9 in.)
18 cm
(7.1 in.)