Model number:
N-2140-59FSWH-FM

DIMENSIONS
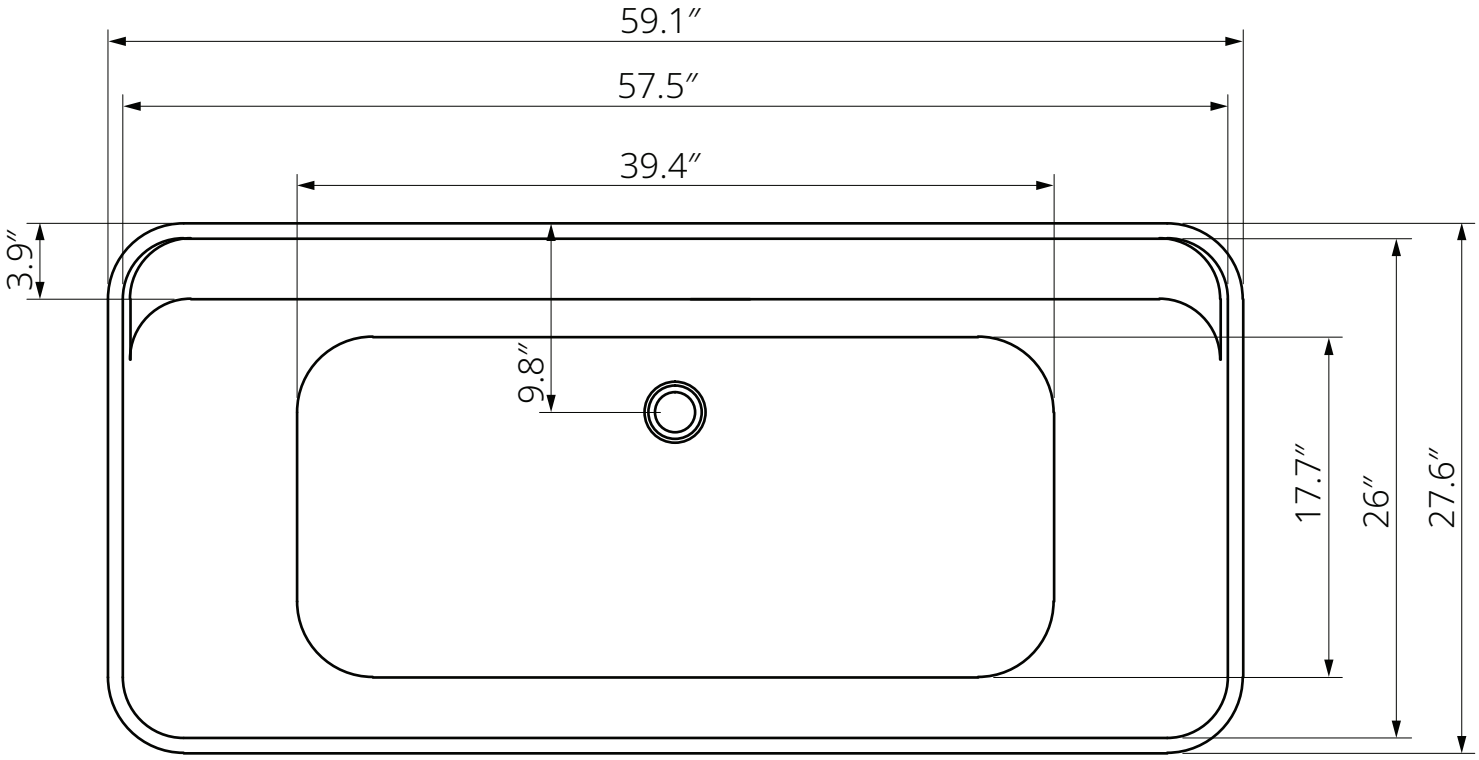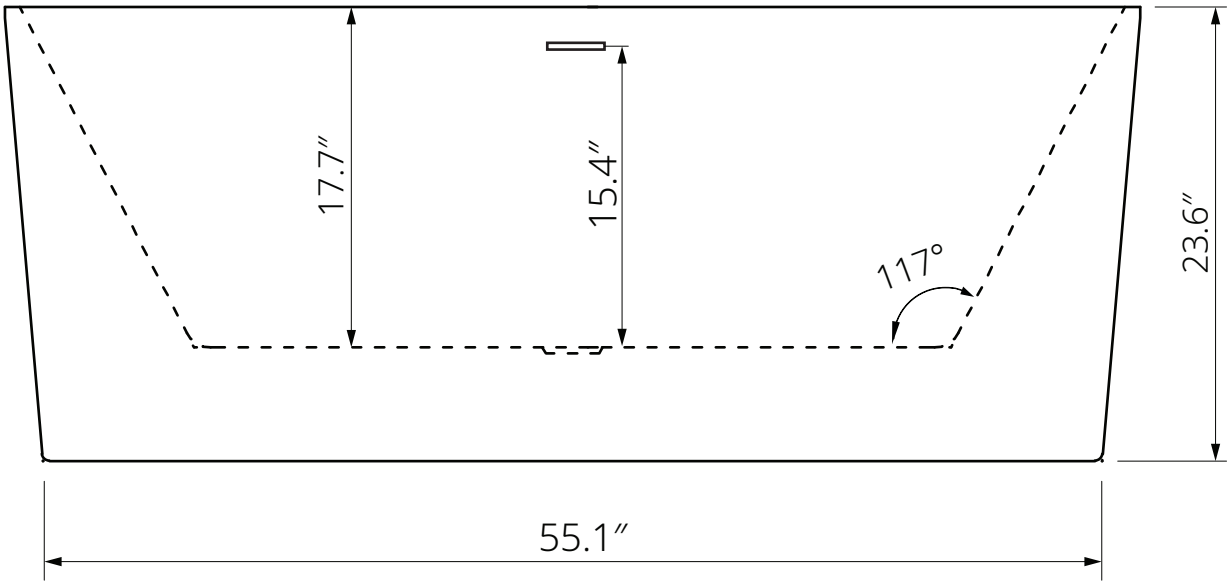
Streamline