American Imaginations

Product ID 17980

	QTY	Product ID	Series	Product Type	Description	Color	Stock*	Expected Stock*	Expected Stock ETA*
	1	1782	Eli	Bathroom Sink Faucet	1 Hole CUPC Approved Lead Free Brass Faucet In Chrome Color	Chrome	86	0	
	1	11026	N/A	Bathroom Vessel Sink	20.5-in. W Above Counter White Bathroom Vessel Sink For 1 Hole Center Drilling	White	91	0	

**Estimated as of 20 Jan 2022 3:33 PM.*

Quality control approved in Canada. Each box on your order is physically opened-up and inspected to make sure only the highest quality product is shipped. We take and store photos of every single quality audit of every single order we ship. You can see them when you track your order on our website. This product is a group of multiple products. It features a rectangle shape. This bathroom vessel sink set is designed to be installed as a above counter bathroom vessel sink set. It is constructed with ceramic. This bathroom vessel sink set comes with a enamel glaze finish in White color. It is designed for a 1 hole faucet.

Feature(s):

• This product is a bundle (set of multiple products).
• This bathroom vessel sink set features a rectangle shape with a modern style.
• This product is made for above counter installation.
• DIY installation instructions are included in the box.
• This bathroom vessel sink set is designed for a 1 hole faucet and the faucet drilling location is on the center.
• Comes with an overflow for safety.
• This bathroom vessel sink set features 1 sink.
• This bathroom vessel sink set is made with ceramic.
• The primary color of this product is white and it comes with chrome hardware.
• Smooth non-porous surface; prevents from discoloration and fading.
• Double fired and glazed for durability and stain resistance.
• 1.75-in. standard USA-Canada drain opening.
• 20.5-in. Width (left to right).
• 17.25-in. Depth (back to front).
• 6.89-in. Height (top to bottom).
• All dimensions are nominal.
• This product can usually be shipped out in 1 day.
• Quality control approved in Canada.
• Each box on your order is physically opened-up and inspected to make sure only the highest quality product is shipped.
• We take and store photos of every single quality audit of every single order we ship.
• You can see them when you track your order on our website.
• THIS PRODUCT INCLUDE(S): 1x bathroom sink faucet in chrome color (1782), 1x bathroom vessel sink in white color (11026).

Product ID:	11026
Product Type:	Bathroom Vessel Sink Set
Shape:	Rectangle
Install Type:	Above Counter
Faucet Drilling:	1 Hole
Faucet Drilling Location:	Center
Overflow:	Yes
Num Of Sinks:	1
Includes Faucets:	Yes
Includes Drains:	No
Width Group:	20-in. - 29-in.
Front Bowl Thickness:	6
Material:	Ceramic
Style:	Modern
Finish:	Enamel Glaze
Hardware Color:	Chrome
Color:	White
Recommended Ship Method:	SP

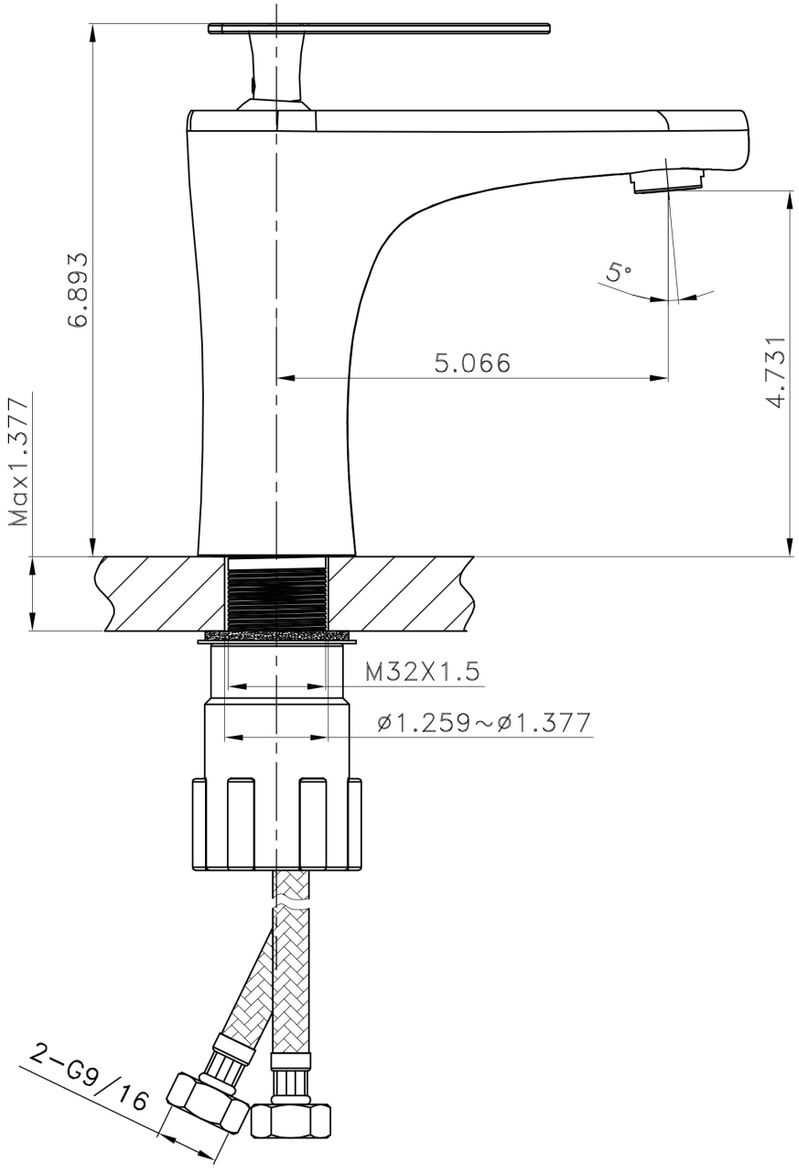
6.893
Max1.377
5.066
5°
4.731
M32X1.5
ø1.259~ø1.377
2-G9/16

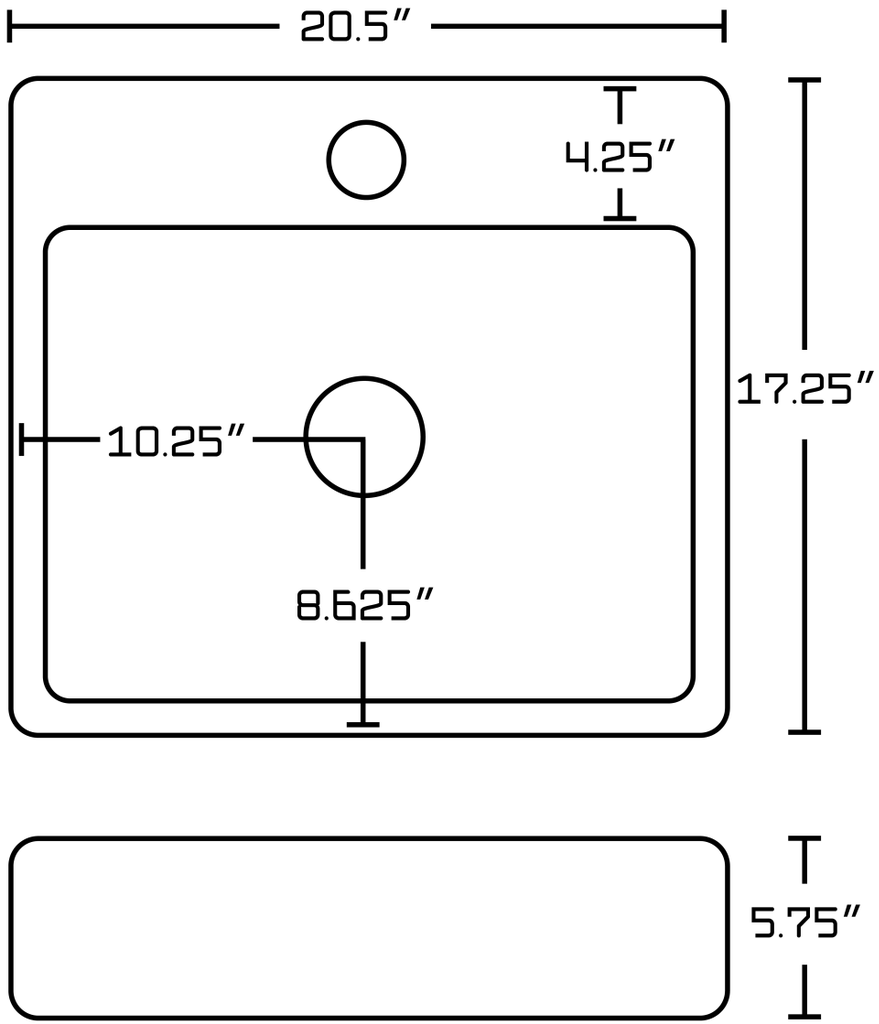
20.5″
4.25″
17.25″
10.25″
8.625″
5.75″

Notes